# DIMENSIONES GENERALES

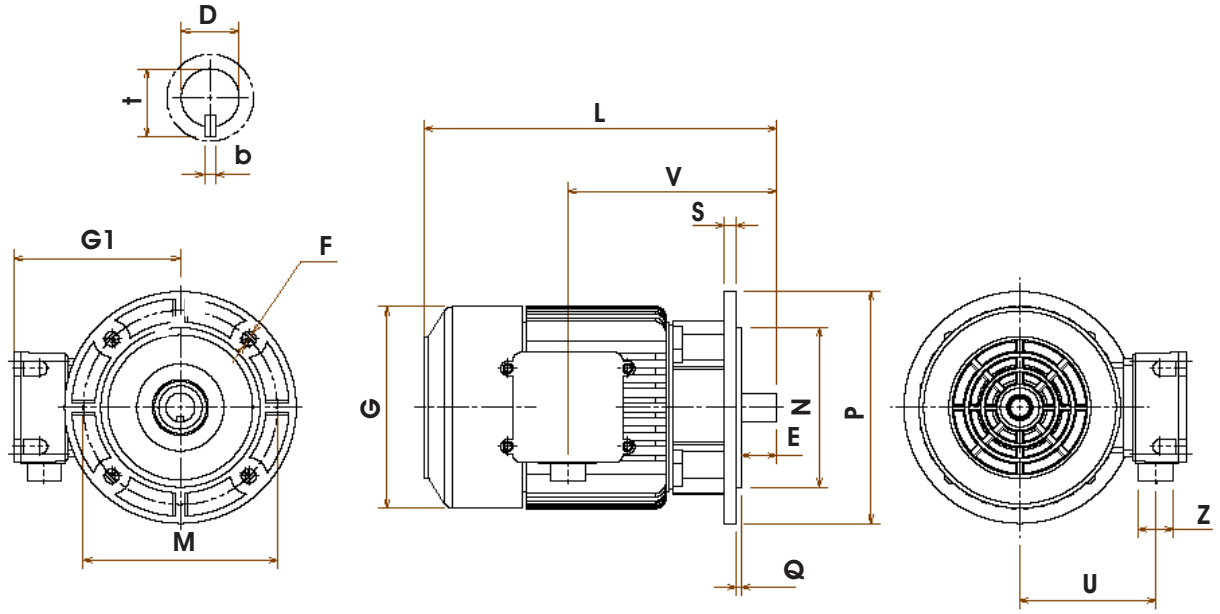


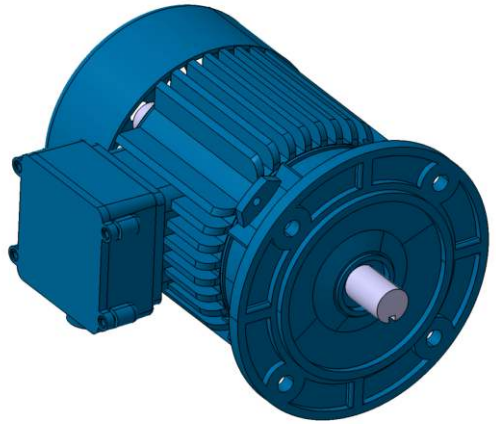

## FRG - B5

**Motor con bridas standard**

| TIPO | A | A1 | b | B | B1 | C | C1 | d | D | E | F | G | G1 | H | I | Ì | L | M | N | P | Q | S | t | U | V | W | Z |
|---|---|---|---|---|---|---|---|---|---|---|---|---|---|---|---|---|---|---|---|---|---|---|---|---|---|---|---|
| **63** | 100 | 125 | 11 | 4 | 105 | 40 | 71 | M4 | 11 | 23 | 9.5 | 125 | 95.5 | 63 | 63 | 10 | 211 | 115 | 95 | 140 | 3 | 10 | 12.5 | 76 | 103 | 7 | 3/8 |
| **71** | 112 | 136 | 14 | 5 | 115 | 45 | 80.5 | M4 | 14 | 30 | 9.5 | 138 | 113 | 71 | 71 | 9 | 241 | 130 | 110 | 160 | 3.5 | 10 | 16 | 91.5 | 101 | 18 | 3/8 |
| **80** | 125 | 153 | 19 | 6 | 130 | 50 | 88.5 | M6 | 19 | 40 | 11.5 | 156 | 133 | 80 | 80 | 10 | 276 | 165 | 130 | 200 | 3.5 | 12 | 21.5 | 99.5 | 120 | 30 | 3/8 |
| **90S** | 140 | 171 | 24 | 8 | 132 | 56 | 98.5 | M8 | 24 | 50 | 11.5 | 176 | 153 | 90 | 90 | 10 | 302 | 165 | 130 | 200 | 3.5 | 12 | 27 | 109 | 132 | 30 | 1/2 |
| **90L** | 140 | 171 | 24 | 8 | 157 | 56 | 98.8 | M8 | 24 | 50 | 11.5 | 176 | 153 | 90 | 90 | 10 | 327 | 165 | 130 | 200 | 4 | 12 | 27 | 109 | 132 | 30 | 1/2 |
| **100** | 160 | 190 | 28 | 8 | 178 | 63 | 112 | M10 | 28 | 60 | 14 | 198 | 163 | 100 | 100 | 10 | 371 | 215 | 180 | 250 | 4 | 16 | 31 | 122 | 163 | 35 | 1/2 |
| **100 L** | 160 | 190 | 28 | 8 | 178 | 63 | 147 | M10 | 28 | 60 | 14 | 198 | 167 | 100 | 100 | 10 | 406 | 215 | 180 | 250 | 4 | 16 | 31 | 134 | 163 | 35 | 1/2 |
| **112** | 190 | 218 | 28 | 8 | 180 | 70 | 121 | M10 | 28 | 60 | 14 | 220 | 177 | 112 | 112 | 12 | 386 | 215 | 180 | 250 | 4 | 16 | 31 | 134 | 163 | 47 | 1/2 |
| **112 L** | 190 | 218 | 28 | 8 | 180 | 70 | 181 | M10 | 28 | 60 | 14 | 220 | 177 | 112 | 112 | 12 | 446 | 215 | 180 | 250 | 4 | 16 | 31 | 134 | 163 | 47 | 1/2 |
| **132** | 216 | 248 | 38 | 10 | 186 | 89 | 148.5 | M12 | 38 | 80 | 14 | 260 | 207 | 132 | 132 | 16 | 453 | 265 | 230 | 300 | 4 | 20 | 41 | 160.5 | 192 | 70 | 1/2 |
| **132 L** | 216 | 248 | 38 | 10 | 224 | 89 | 148.5 | M12 | 38 | 80 | 14 | 260 | 207 | 132 | 132 | 16 | 491 | 265 | 230 | 300 | 4 | 20 | 41 | 160.5 | 192 | 70 | 1 /2 |